Single Bowl Raised Pet Feeder

posted by orangesugar [1]

This plan was born out of necessity. We adopted a second husky and each dog needed their own place to eat. Raised feeders are more comfortable for larger dogs and reduce air intake. Unfortunately they can be pricey. If there is one thing that I have learned from this site it’s that you can usually build something better and cheaper all by yourself!

This plan can easily be customized to your dog’s size by lengthening or shortening the 2×2′s.

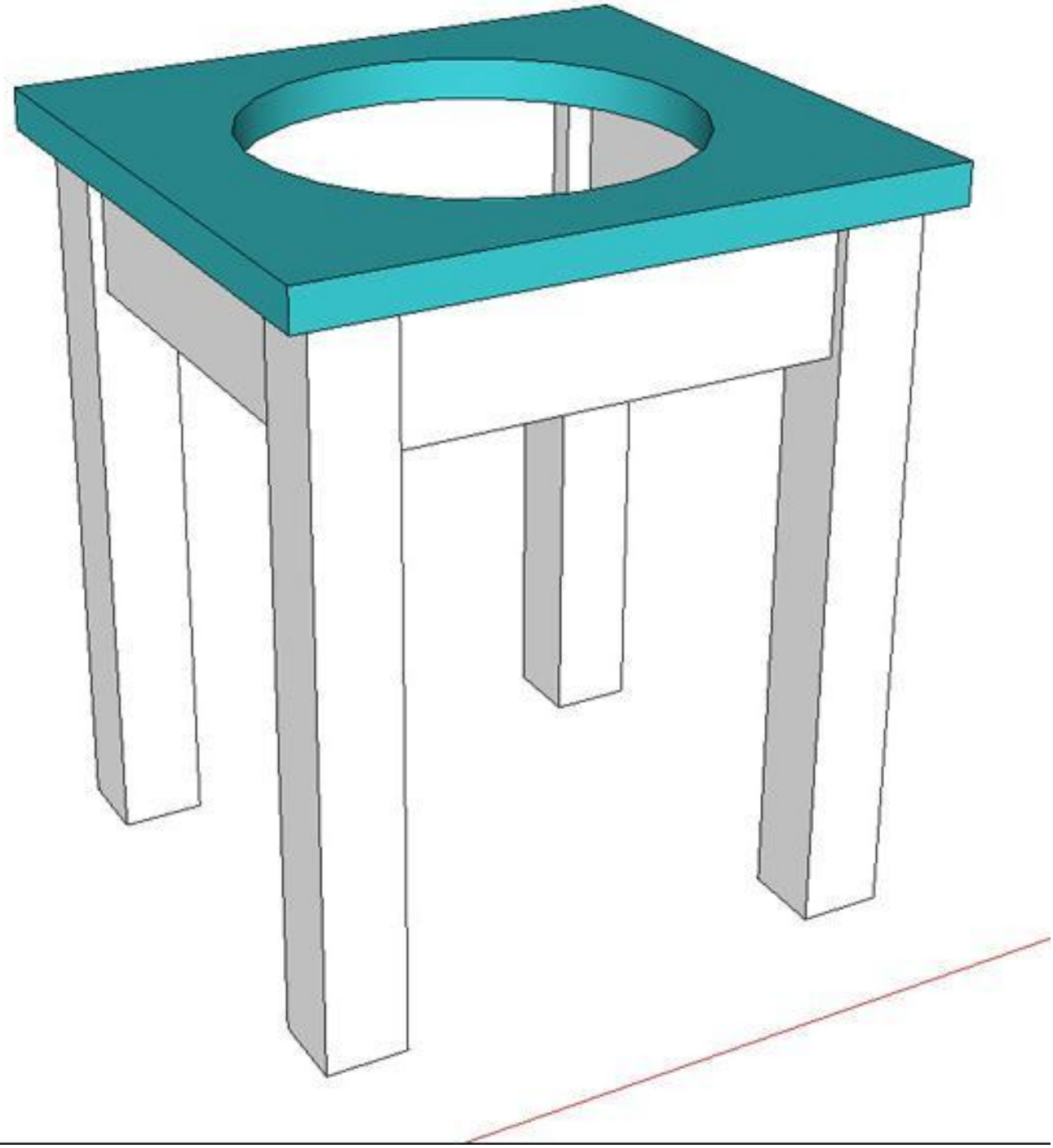

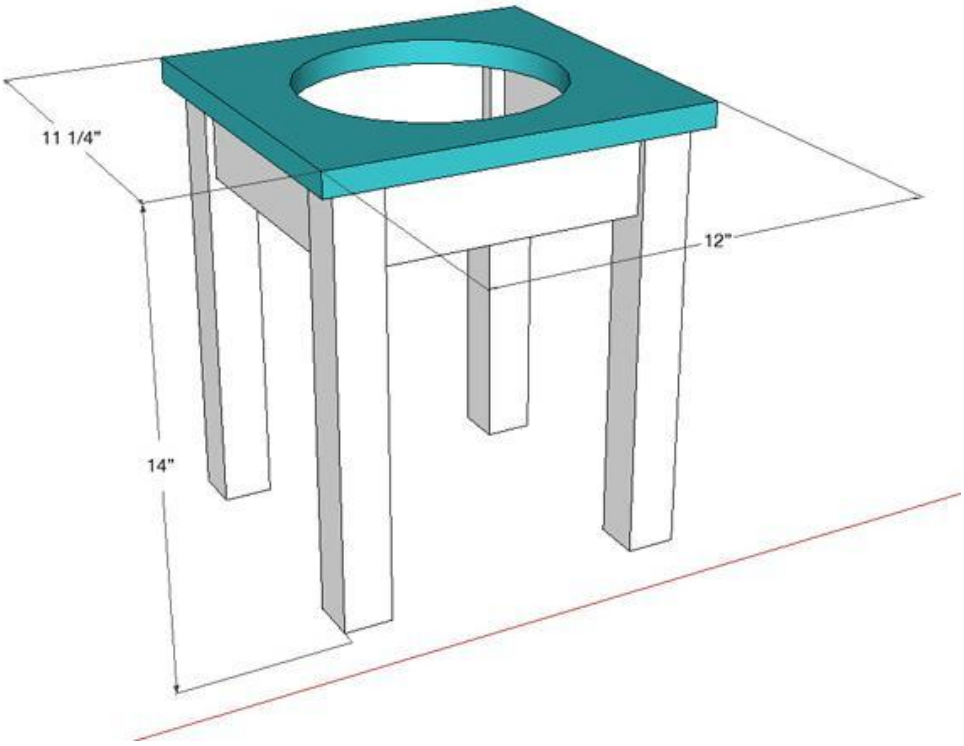

Dimensions: 11 1/4″ w x 14″ h x 12″ d
Materials and Tools**Shopping List:**

- 1 x 12 @ 12″
- 1 x 2 @ 30 1/2″
- 2 x 2 @ 53″
- 64 oz. Basic Stainless Bowl [2] with lip from Petco

Tools: measuring tape
Kreg Jig™ [3]
drill
jigsaw
Dimensions**Dimensions:**
Cut List**Cut List:**

- 1 – 1 x 12 @ 12″ (Top)
- 2 – 1 x 3 @ 7 1/4″ (Front and Back Boards)
- 2 – 1 x 3 @ 8″ (Side Boards)
- 4 – 2 x 2 @ 13 1/4″ (Legs)

General InstructionsPlease read through the entire plan and all comments before beginning this project. It is also advisable to review the Getting Started Section. Take all necessary precautions to build safely and smartly. Work on a clean level surface, free of imperfections or debris. Always use straight boards. Check for square after each step. Always predrill holes before attaching with screws. Use glue with finish nails for a stronger hold. Wipe excess glue off bare wood for stained projects, as dried glue will not take stain. Be safe, have fun, and ask for help if you need it. Good luck!
PDF**Plan PDF:** SingleRaisedFeeder.pdf [4]

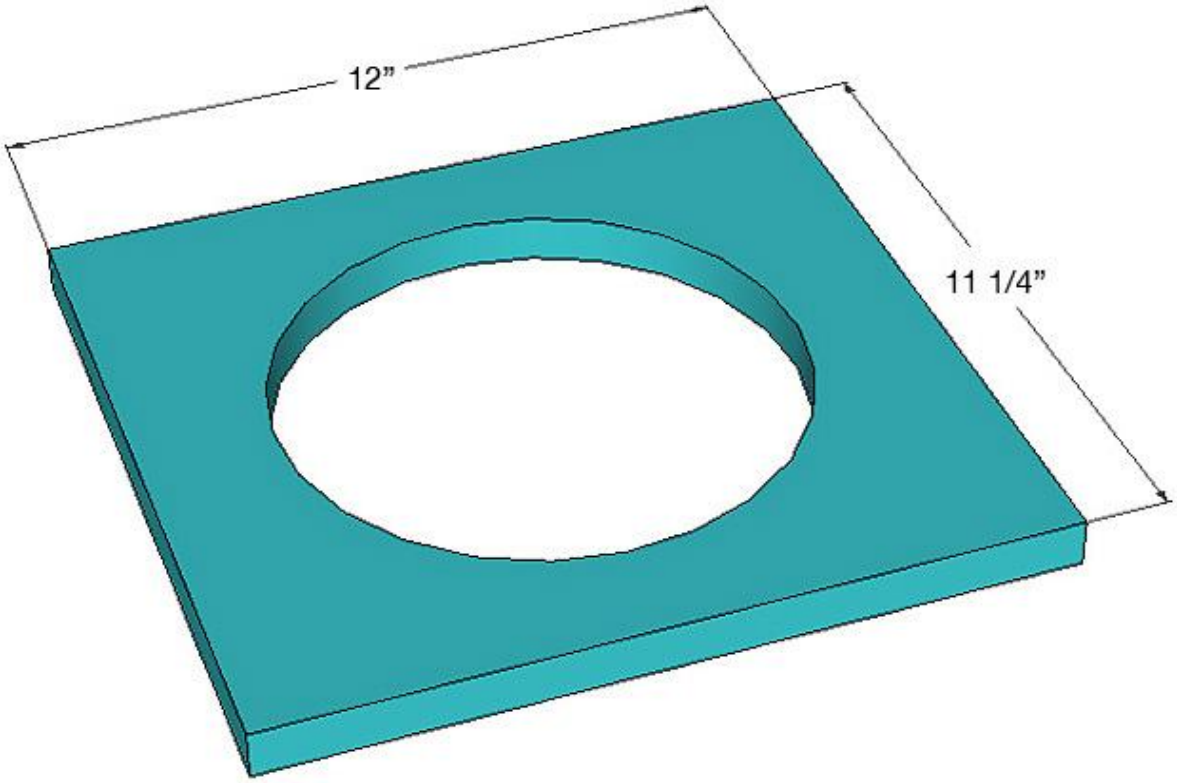

Use your jigsaw to cut a circle for the bowl. The bowl I am using for this plan is 8 1/2″ in diameter and I am cutting out an 8″ circle to leave a 1/2″ lip for the bowl to rest on. If you have a compass (http://tinyurl.com/63akpdv) laying around, that can help with your circle drawing.

Step 1

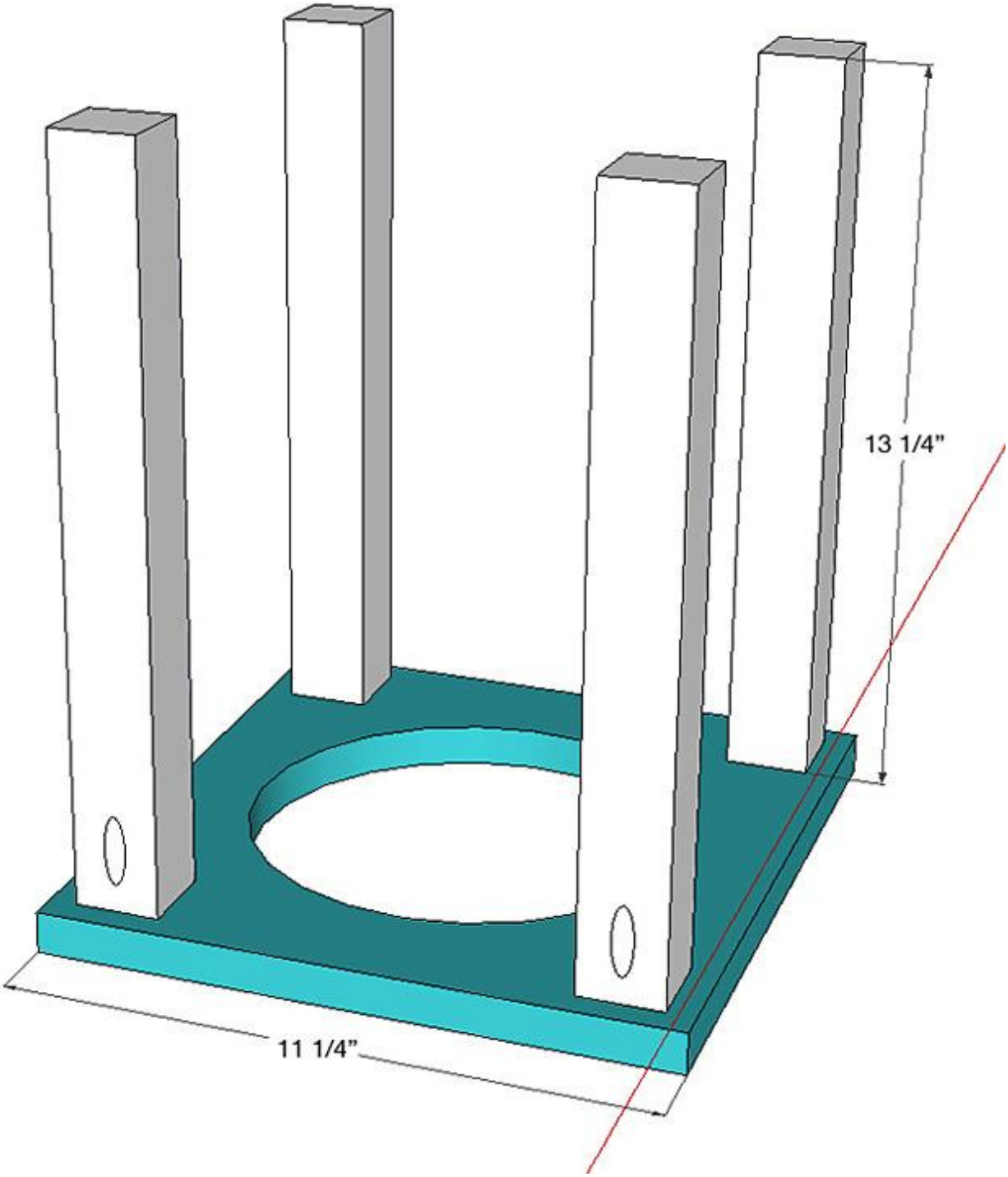

Using one pocket hole per 2×2 (see image for placement) glue and screw each leg to the top. Inset each leg 1/2″ from the front and side.

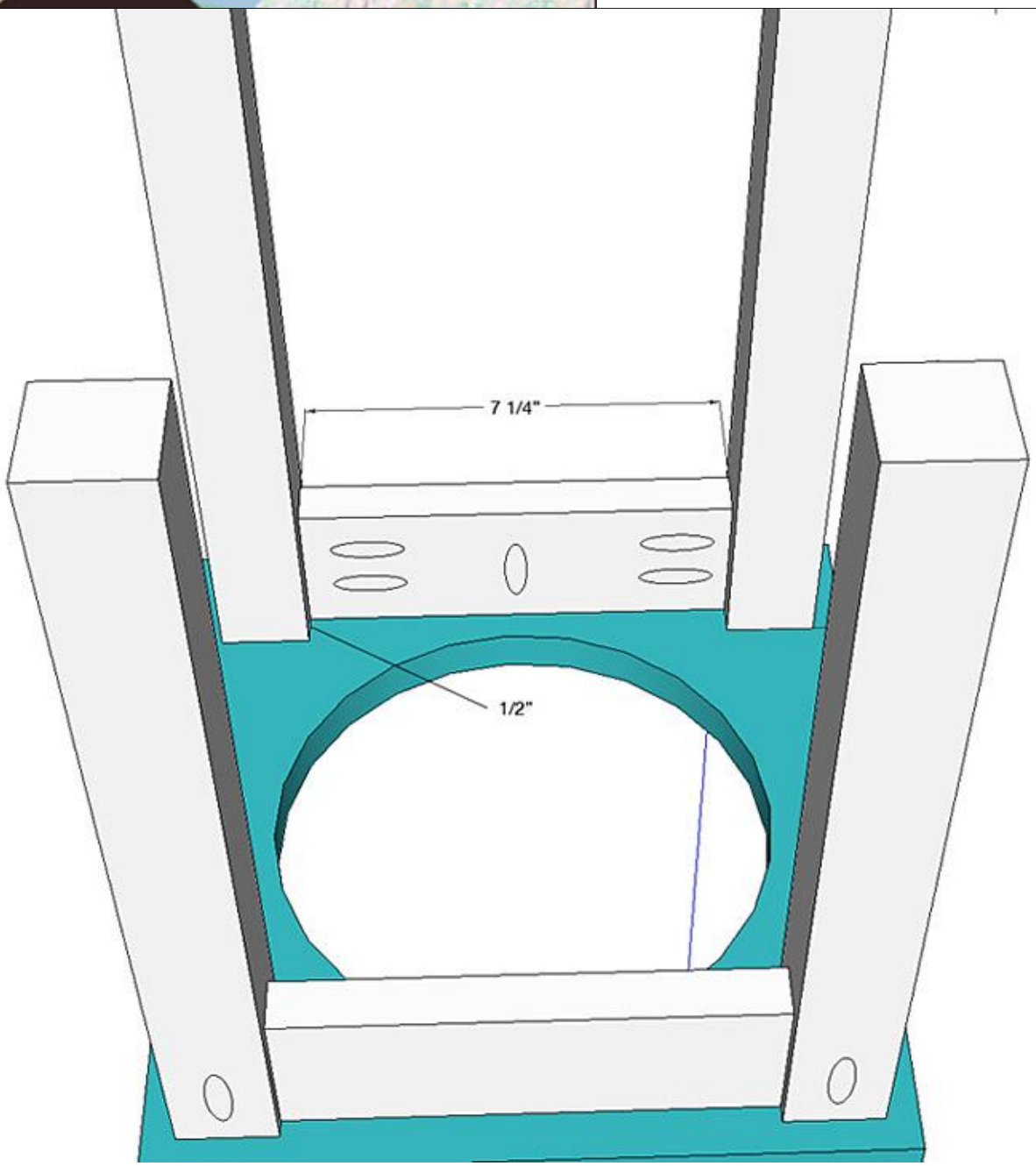

Attach front and back boards to legs and top using pocket holes. Each board should be inset 1/4″, which will leave 1/2″ of the leg showing on the inside.

Step 3

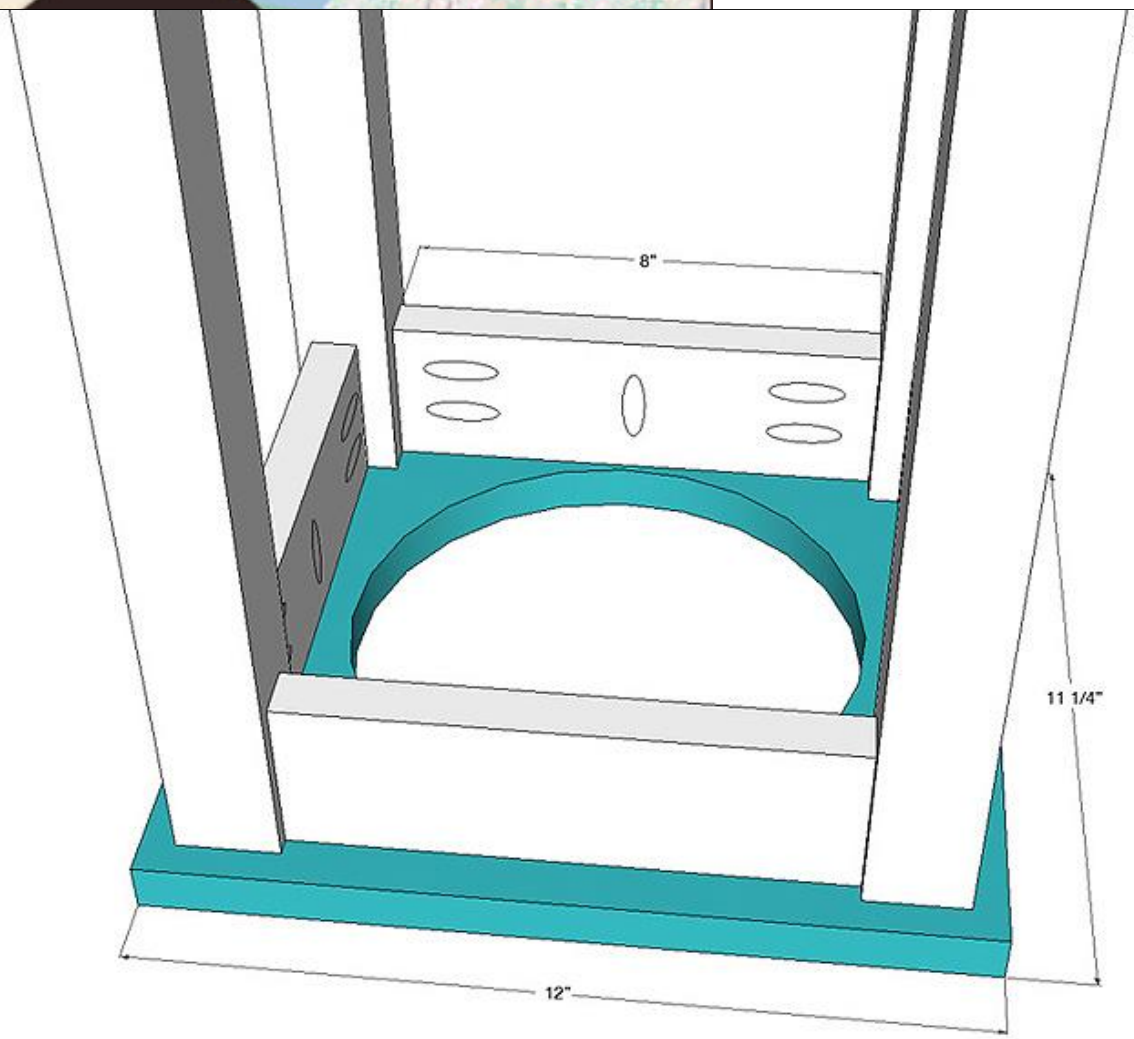

Attach side boards to legs and top using pocket holes. Each board should be inset 1/4″, which will leave 1/2″ of the leg showing on the inside.
Finishing Instructions**Preparation Instructions:** Fill exposed pocket holes on each leg with filler of choice or pocket hole plugs, and paint or stain as desired.
Instructions on measuring your dog for a raised feeder can be found here [5].

Other Projects **[6],** dining room **[7],** Beginner **[8],** $20 - $50 **[9],** Modern **[10]**

Source URL: http://ana-white.com/2011/03/single-bowl-raised-pet-feeder

Step 4
Links:
[1] http://ana-white.com/users/orangesugar
[2] http://www.petco.com/product/105621/PETCO-Basic-Stainless-Steel-Bowl.aspx
[3] http://www.kregtool.com/files/anawhite/anawhite.asp
[4] http://ana-white.com/sites/default/files/SingleRaisedFeeder.pdf
[5] http://www.trendypet.com/how-to-measure-dog-elevated-feeder.php
[6] http://ana-white.com/category/plans/project-type/other-projects
[7] http://ana-white.com/category/plans/room/dining-room
[8] http://ana-white.com/category/plans/skill-level/beginner
[9] http://ana-white.com/category/plans/estimated-cost/20-50
[10] http://ana-white.com/category/plans/style/modern