Vintage Doll Cradle

posted by Ana White [1]

How to make a wood doll cradle. Free plans to build a DIY wood doll cradle that rocks. Includes step by step instructions, cut list and shopping list.

About Project**Author Notes:**
As much as we are enjoying the sun, I'm ready to get home and make some sawdust! I'm good for about a week on vacation, then I just gotta find something productive to do! Thank you everyone for helping others, answering questions, and being patient with me. Can't wait to get home and get back to the garage!

Also thank you to Jaime from That's My Letter [2]for putting together this vintage doll crib for you today! I'll let Jaime take it from here on how she built and finished it, but of course, plans follow. [2] Thanks Jaime!

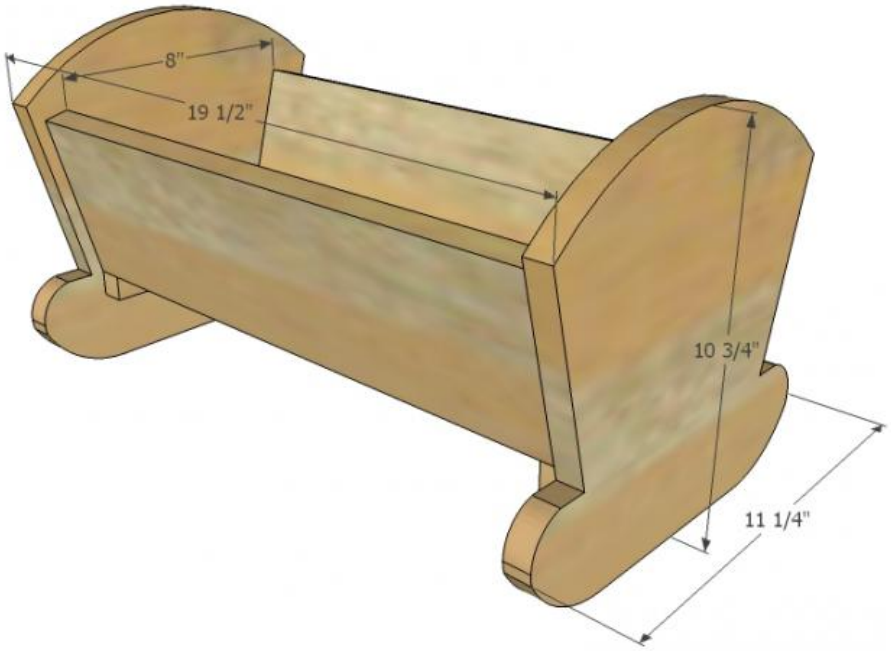

Dimensions: Fits 18" doll or American Girl Doll. This is a toy.
Materials and Tools**Shopping List:**
1 – 1x12 @ 24”
1 – 1x6 @ 5 feet long
1x1 moulding or scraps cut to 1x1 size
2” finish nails or screws
1 ¼” finish nails

2 inch screws
1 1/4 inch finish nails
wood glue
wood filler
120 grit sandpaper
paint
paint brush
Tools: measuring tape
square
pencil
Dimensions**Dimensions:**
safety glasses
hearing protection
drill
jigsaw
nailer
sander
countersink drill bit
Cut List**Cut List:**
2 – 1x12 @ 10 ¾”
2 – 1x1 @ 6 ¾”
3 – 1x6 @ 18”

General Instructions
Please read through the entire plan and all comments before beginning this project. It is also advisable to review the Getting Started Section. Take all necessary precautions to build safely and smartly. Work on a clean level surface, free of imperfections or debris. Always use straight boards. Check for square after each step. Always predrill holes before attaching with screws. Use glue with

finish nails for a stronger hold. Wipe excess glue off bare wood for stained projects, as dried glue will not take stain. Be safe, have fun, and ask for help if you need it. Good luck!

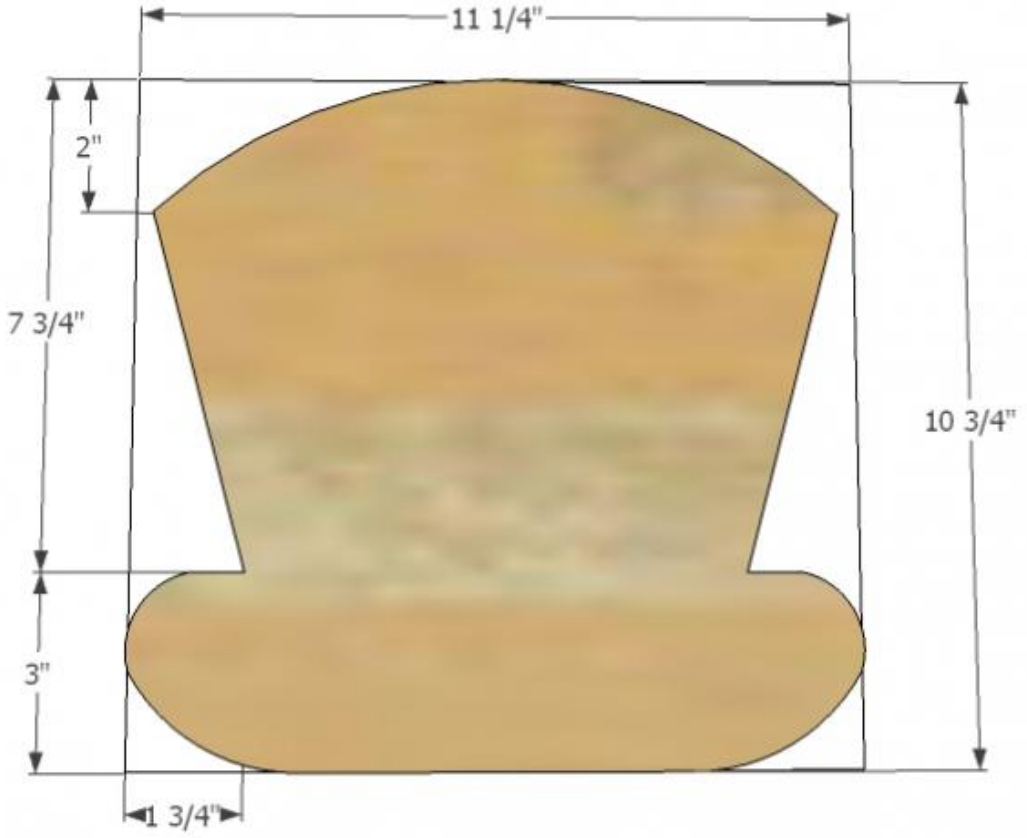

Draw pattern out on 1x12 ends. Edges can be rounded to avoid sharp corners. Cut out carefully with jigsaw and sand all rough edges.

TIP: It’s a good idea to mark out the location of the cleat (next step) while the board is still square. Also mark center of board so you can easily line up center of bottom at step 3.

Step 1

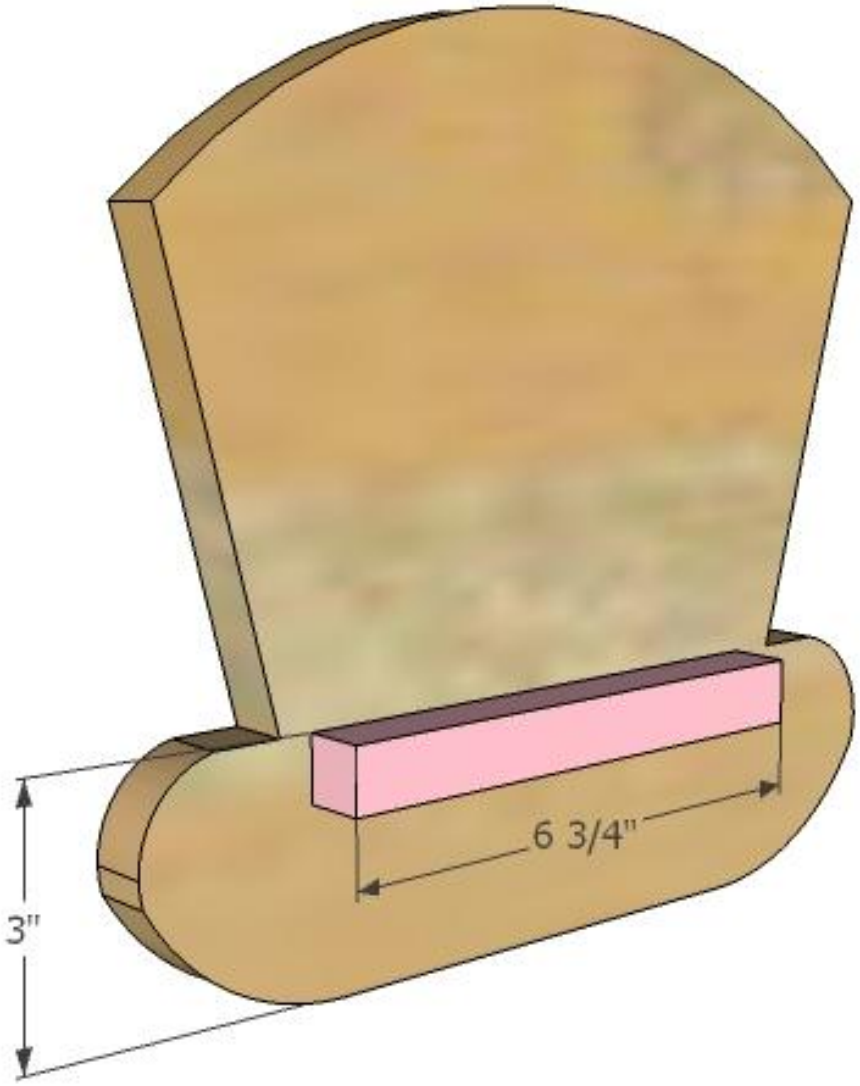

Attach cleats as shown in diagram with 1 ¼” finish nails and wood glue.
Step 2

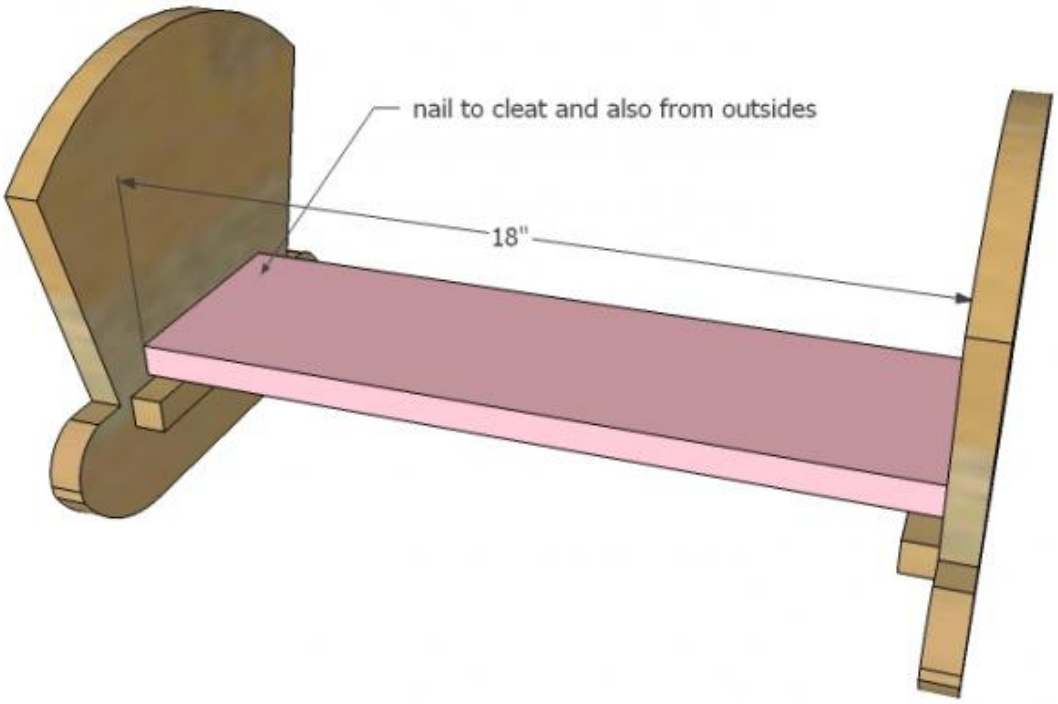

Now add bottom shelf. Use 2" countersunk screws and glue. Kreg Jig users - use 3/4" pocket holes and 1 1/4" pocket hole screws.

Step 3

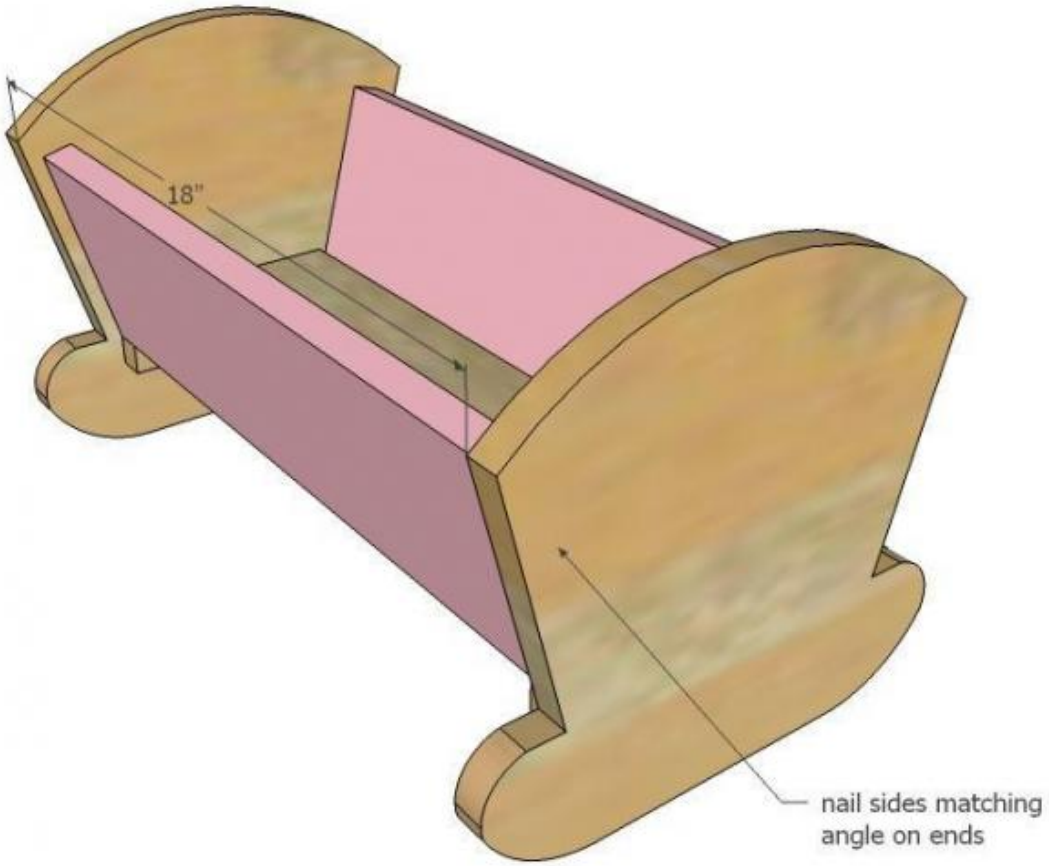

Attach sides with 2" screws and glue. Sides follow the angle of the ends.

Finishing Instructions**Preparation Instructions:** Fill all holes with wood filler and let dry. Apply additional coats of wood filler as needed. When wood filler is completely dry, sand the project in the direction of the wood grain with 120 grit sandpaper. Vacuum sanded project to remove sanding residue. Remove all sanding residue on work surfaces as well. Wipe project clean with damp cloth. It is always recommended to apply a test coat on a hidden area or scrap piece to ensure color evenness and adhesion. Use primer or wood conditioner as needed.

Step 4
Special thanks to Jaime from That's My Letter [2]for putting together this Vintage Doll Cradle.

Doll Furniture **[3],** Kids and Toys **[4],** Beginner **[5],** Under $20 **[6],** Children's **[7]**

Source URL: http://ana-white.com/2012/01/plans/vintage-doll-cradle

Links:
[1] http://ana-white.com/users/ana-white
[2] http://thatsmyletter.blogspot.com/2012/01/c-is-for-crib-2.html
[3] http://ana-white.com/category/plans/project-type/doll-furniture
[4] http://ana-white.com/category/plans/room/kids-and-toys
[5] http://ana-white.com/category/plans/skill-level/beginner
[6] http://ana-white.com/category/plans/estimated-cost/under-20
[7] http://ana-white.com/category/plans/style/childrens